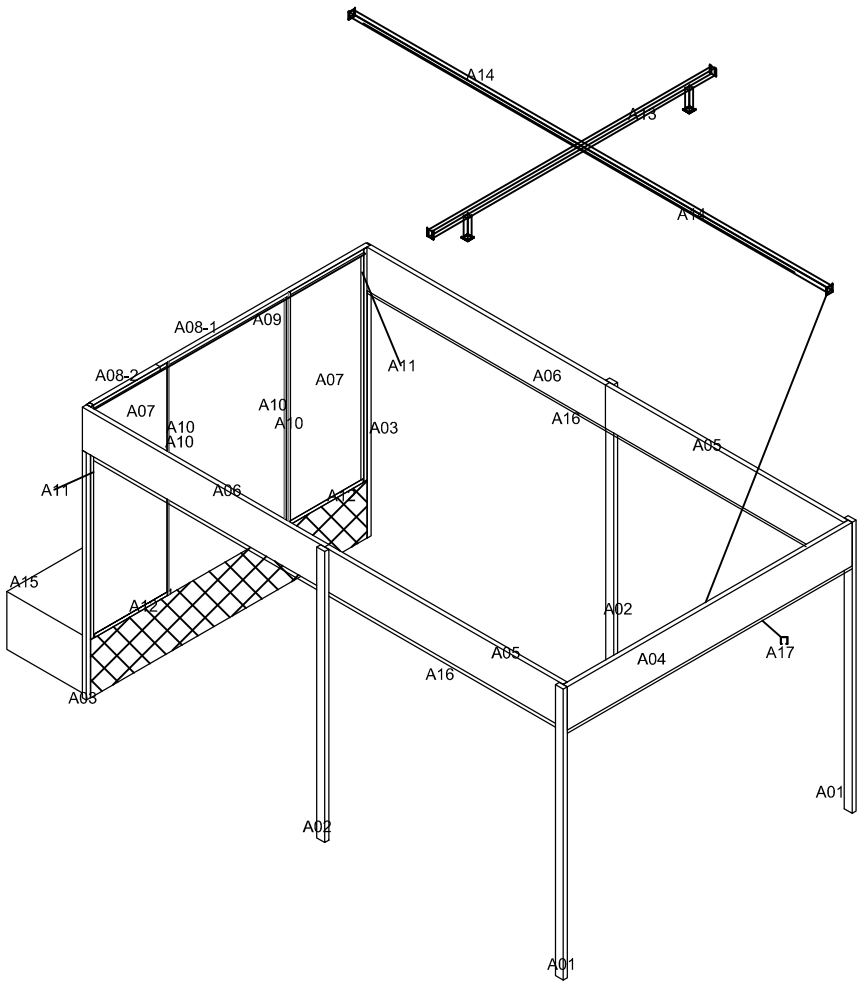

A17	curtain rail	3480*30*30	1
A16	curtain rail	6020*30*30	2
A15	Bottom of generator	3480*1055*630	1
A14	Roof support beam	50*50*3000	2
A13	Roof support beam	40*80*3480	1
A12	rim of back wall	960*53*30	2
A11	rim of back wall	2540*53*30	2
A10	rim L of back wall	2540*25*30	4
A09	rim of roof cover	25*25*3480	1
A08-1/-2	rim of back wall	725*50*53-1, 2755*50*53-2	2
A07	Back wall panel	2535*985*50	2
A06	Back air chamber side plate	3052*53*471	2
A05	front air chamber side plate	3000*53*471	2
A04	Air Chamber transvere plate	3586*53*472	1
A03	Back upright post	2700×50×50	2
A02	Middle upright post	3172×100×50	2
A01	Front upright post	3172×100×50	2
Chart NO.	NAME	specification	quan

design	LY	date	

body

GL400

weight	scale
	1:49

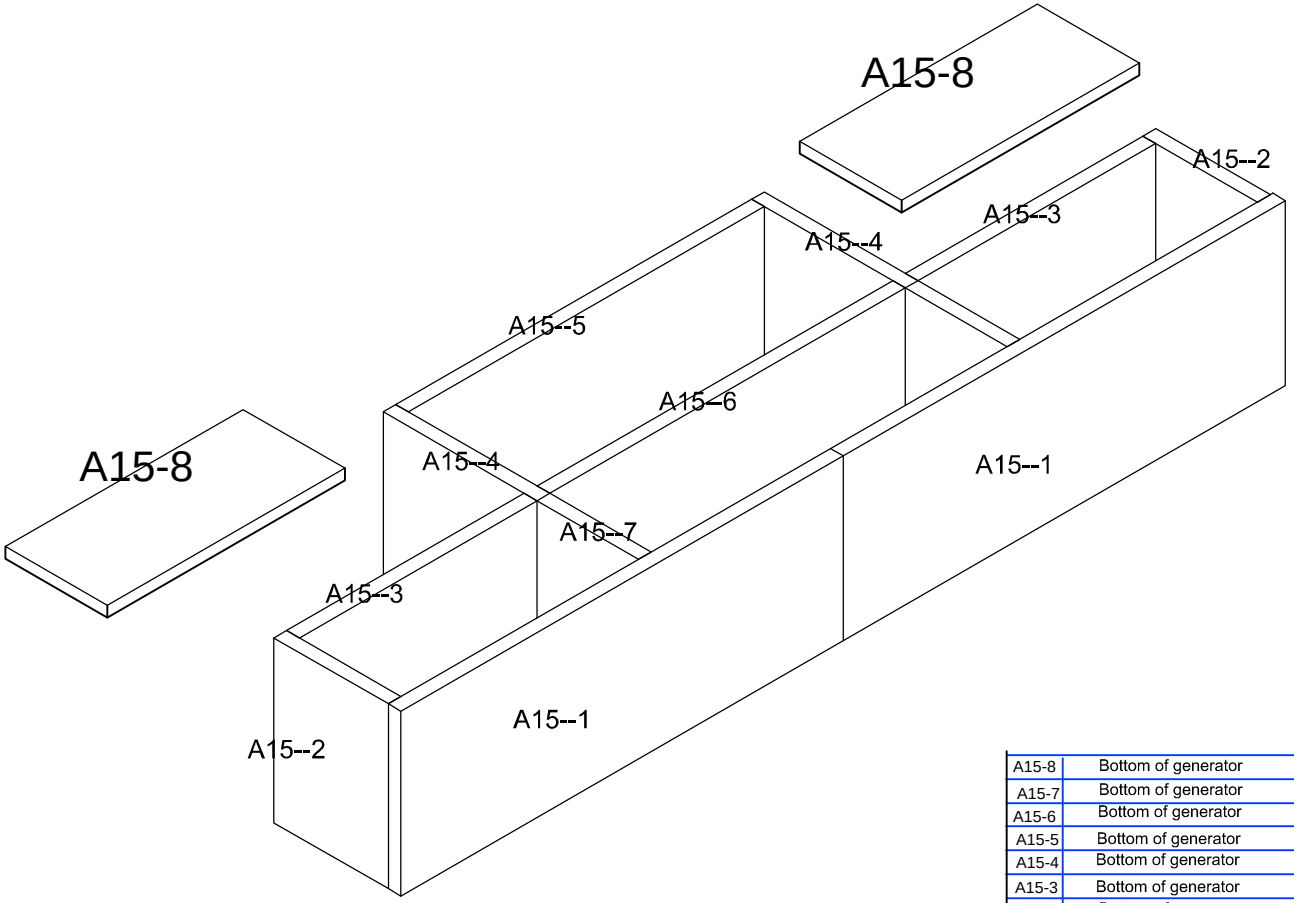

Chart NO.	NAME	specification	quan	PL NO.
A15-8	Bottom of generator	932*395*20	2	22
A15-7	Bottom of generator	400*50*630	2	
A15-6	Bottom of generator	1400*50*630	1	
A15-5	Bottom of generator	1400*53*630	1	
A15-4	Bottom of generator	605*53*630	2	
A15-3	Bottom of generator	935*53*630	2	
A15-2	Bottom of generator	450*53*630	2	
A15-1	Bottom of generator	1740*50*630	2	

design	LY	date	

body

GL400

weight	scale
	1:49

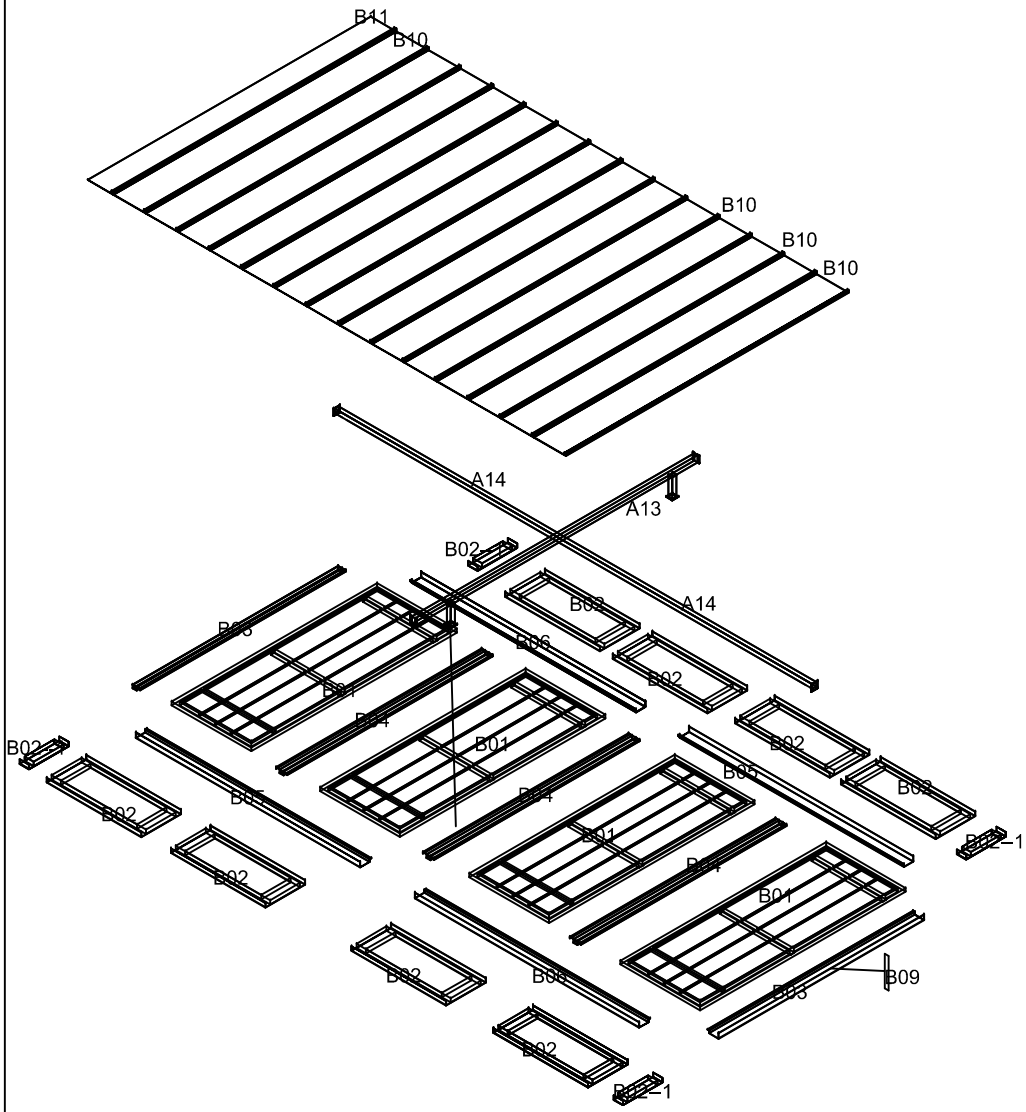

B11	Roof cover plate	0.6*360*3470	1
B10	Roof cover plate	0.6*313*3470	18
A14	Roof support beam	3000×50×50	2
A13	Roof support beam	3480×40×80	1
B06	closure plate	3000×80	2
B05	closure plate	3000×80	2
B04	middle groove	2363×80	3
B03	front and back groove	2363×80	2
B02-1	Light box fixture	243x456x80	4
B02	Light box	1378×456×80	8
B01	ceiling filter frame	2356×1394	4
Chart NO.	NAME	specification	quan

design	LY	ceiling	GL400
			weight / scale 1:49

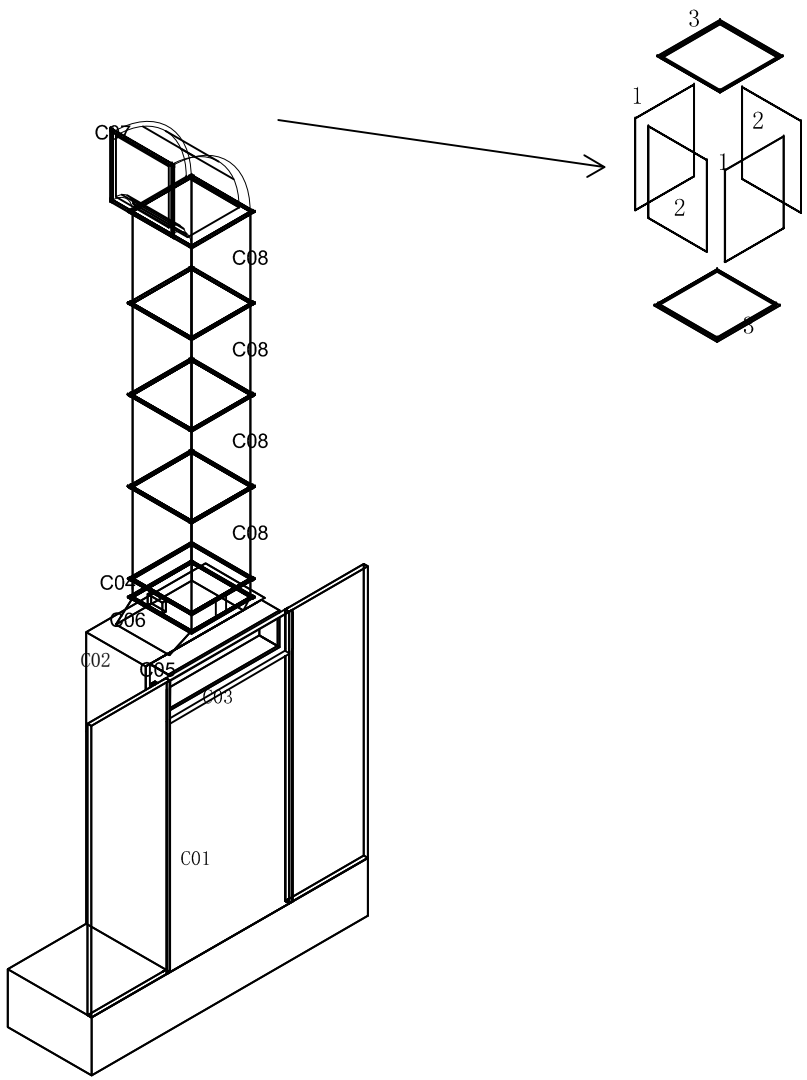

C08	Duct	740*740*1000	4
C07	90° bend	740*740	1
C06	Transcation from heat exchanges	1400*700---740*740	1
C05	VCD damper	1400*400*200	1
C04	VCD damper	740*740*160	1
C03	Frame of air enter	1500*480*50	1
C02	Top frame of generator	1500*800*480	1
C01	Middle frame of generator	1500*1055*2060	1
Chart NO.	NAME	specification	quan

design	LY	generator	GL400
			weight / scale 1:49

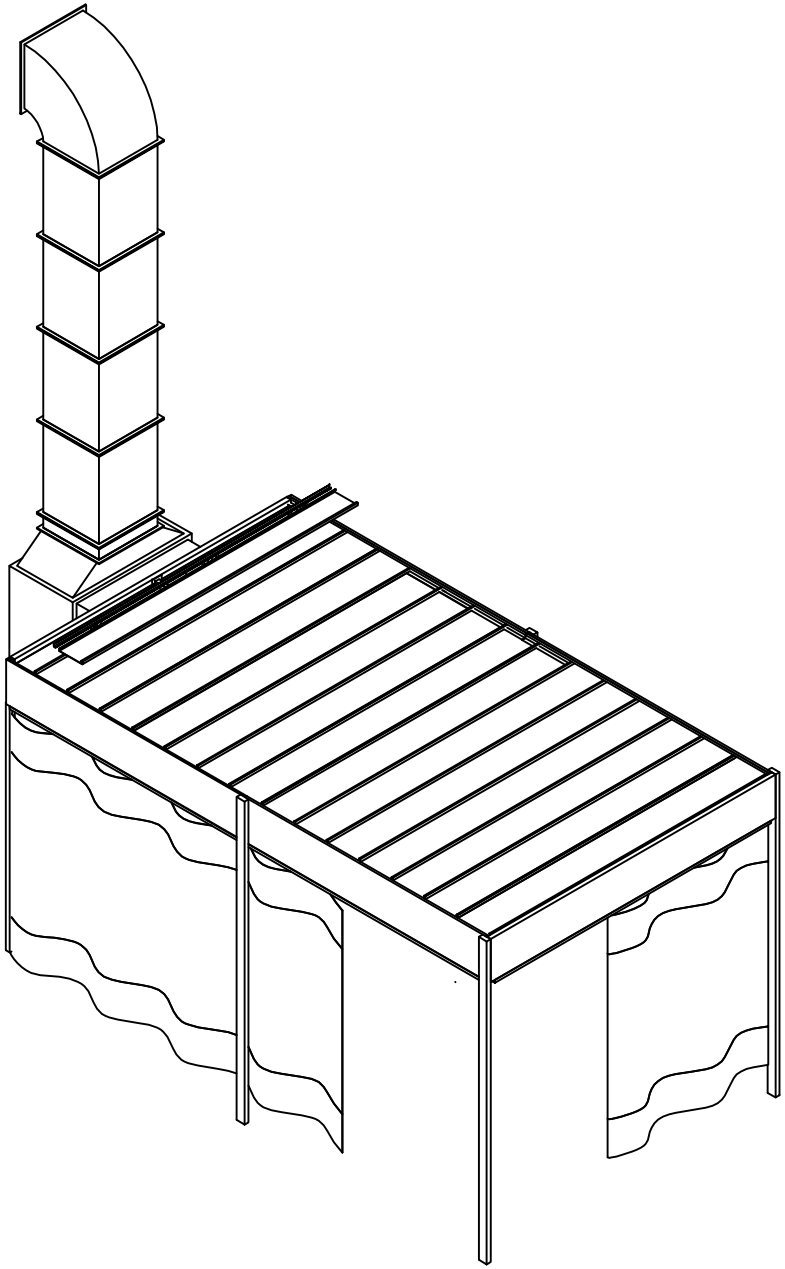

design	LY	outlook	GL400
			weight / scale 1:49